Operating Instructions

Oil condensing boilers

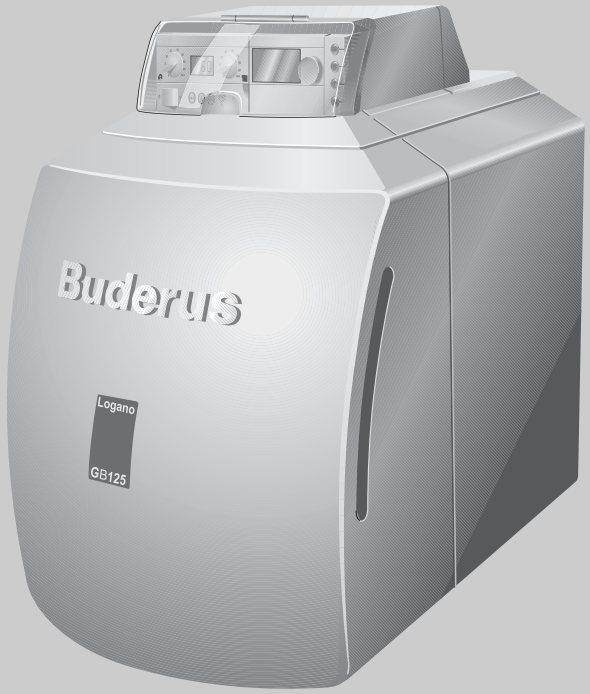

Logano GB125 with Logatop BE burner

For contractors

Read carefully before installation and maintenance.

6 720 646 464 (03/2007)
SY/JO/LB/IL/PS/SA/AE/OM/QA/BH/YE/IR/AF/IQ/GE/AZ/AM/KW

Buderus

1 For your safety . . . 3

1.1 About these instructions . . . 3
1.2 Correct use . . . 3
1.3 Symbol key . . . 3
1.4 Observe this information . . . 3
1.4.1 Tips regarding the installation room . . . 4

2 Product description . . . 5

3 Operating the heating system . . . 6

3.1 Switching on the heating system . . . 6
3.1.1 Starting the heating system via the control unit and programming unit . . . 6
3.2 Shutting down the heating system . . . 7
3.3 In an emergency . . . 7
3.4 Checking the operating pressure and possibly topping-up the heating water and venting the system . . . 8
3.4.1 When should you check the operating pressure? . . . 8
3.4.2 Checking the operating pressure . . . 8
3.4.3 Topping up with heating water and venting the system . . . 8
3.5 Operating information . . . 10
3.6 Why is regular maintenance important? . . . 11

4 Troubleshooting . . . 12

4.1 Identifying and clearing faults . . . 12

1 For your safety

1.1 About these instructions

These instructions contain important information regarding the safe and correct operation of this boiler.

In the following, the oil-fired special boiler Logano GB125 with Logatop BE burner will generally be referred to as the boiler.

1.2 Correct use

The boiler must only be used to heat heating water and for DHW heating, e.g. for detached houses or apartment buildings.

1.3 Symbol key

In these instructions, the following symbols are used:



RISK OF FATAL INJURY

Identifies possible risks that may result in serious injury or death if appropriate care is not taken.



RISK OF INJURY/ SYSTEM DAMAGE

Identifies potentially dangerous situations, which might lead to medium or slight injuries or to material losses.



USER INFORMATION

User tips for the optimum utilisation and adjustment of the appliance plus other useful information.

→ Cross references

Cross references to a specific point in the document or to other documents are marked with an arrow → .

1.4 Observe this information

You will learn how to use your heating system by

- letting your heating contractor instruct you when the system is handed over and
- reading these operating instructions carefully.

Never carry out any work on the boiler that is not described in these operating instructions.



RISK OF FATAL INJURY

by unqualified personnel.

- ▶ Installation, commissioning and maintenance must only be carried out by a specialist heating contractor. Appropriate qualifications are particularly necessary for work on electrical and fuel-carrying parts.



RISK OF FATAL INJURY

due to neglecting your own safety in emergencies, such as in case of a fire.

- ▶ Never risk your own life. Your own safety is paramount.

1.4.1 Tips regarding the installation room

RISK OF FATAL INJURY

through poisoning.
An insufficient supply of air can result in the escape of dangerous flue gas.

- Ensure that ventilation or extract air apertures are not reduced or closed.
- Keep the boiler room doors closed.
- Protect the boiler room and particularly the combustion air inlet against ingress of small animals, e.g. through grilles.
- The boiler must not be operated until the obstruction has been removed.

RISK OF FIRE

through flammable materials or liquids.

- Ensure that there are no flammable materials or liquids in the immediate vicinity of the boiler.

2 Product description

This boiler is a condensing boiler for oil combustion with modulating boiler water temperature control.

The boiler comprises:

- Control unit
- Boiler casing
- Boiler block with thermal insulation
- Burner
- Heat exchanger system

The control unit monitors and controls all electrical boiler components.

The boiler shell prevents energy losses and acts as a silencer.

The boiler block transfers the heat generated by the burner to the heating water. The thermal insulation prevents heat losses.

CE The design and operation of this product conforms to European Directives and the supplementary national requirements. Its conformity is confirmed by the CE marking.

You can view the Declaration of Conformity on the internet at www.buderus.de/konfo or request a copy from your local Buderus office.

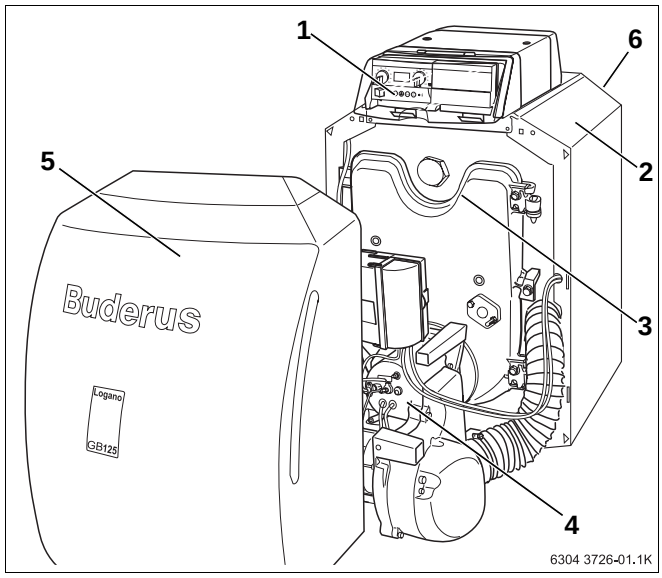

Fig. 1 Front view Logano GB125

1 Control unit
2 Boiler casing
3 Burner door
4 Oil burner
5 Burner hood
6 Heat exchanger system

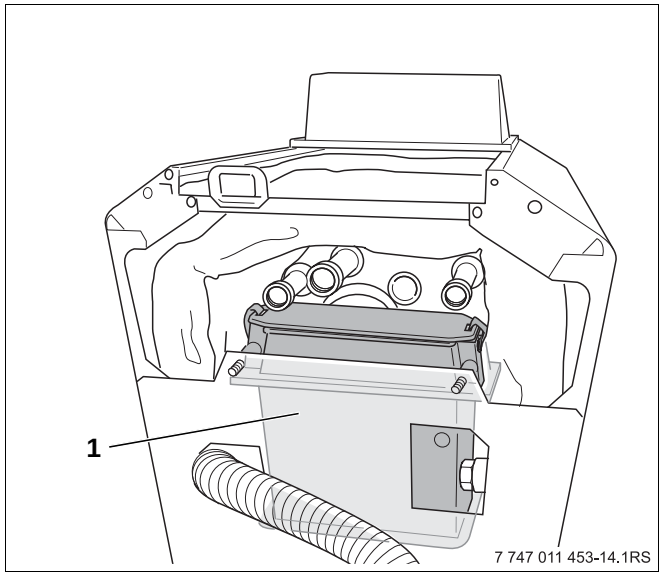

Fig. 2 Back view Logano GB125 (shown excluding thermal insulation)

1 Heat exchanger system

3 Operating the heating system

3.1 Switching on the heating system

Before switching the system on, check that

- the operating pressure is high enough,
- the fuel supply is open at the main shut-off valve and
- the heating system emergency stop switch is switched on.

3.1.1 Starting the heating system via the control unit and programming unit

▶ Set both rotary selectors on the control unit to "AUT" (automatic mode). The programming unit takes control of the panel in this setting.

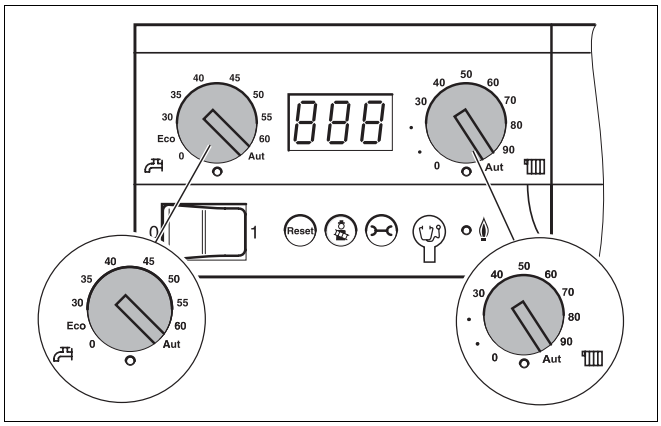

Fig. 3 Setting the control unit

▶ Switch the ON/OFF switch ON (position "I"). The control unit checks the current system status, and the burner starts, if appropriate.

If the boiler recognises a heat demand, the start program commences and approx. 30 seconds later the burner fires up. A heat demand is triggered if the heating or the DHW temperatures fall below their respective set values. The LED below the relevant rotary selector illuminates.

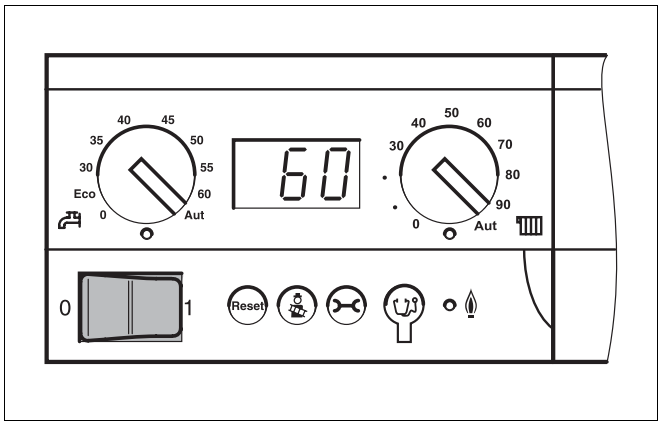

Fig. 4 Switching on the heating system

- ▶ Check and make sure that the following settings on programming unit RC30/RC35 are set:
- Automatic operating mode
- Required room temperature
- Required DHW temperature
- Required heating program

USER INFORMATION

- ▶ For information regarding the operation, e.g. selecting of temperatures, see the → documents for the programming unit.

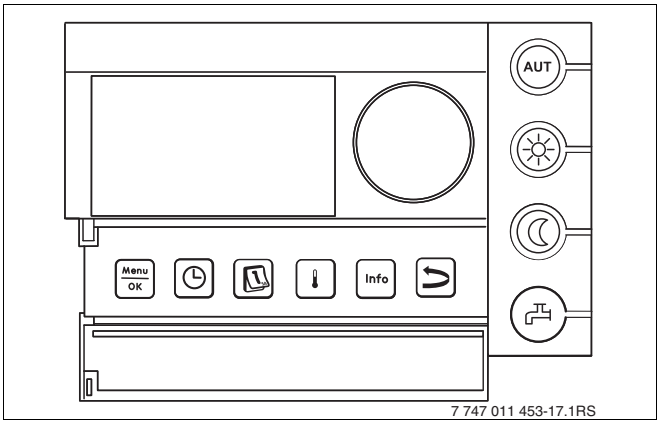

Fig. 5 Programming unit (e.g. RC35, with flap open)

3.2 Shutting down the heating system

- ▶ Switch the ON/OFF switch on the control unit OFF (position "0"). This switches off the boiler and all its components (such as the burner).
- ▶ Close the main fuel shut-off valve.

SYSTEM DAMAGE

from frost.

When the heating system is switched off, it can freeze up if there is a frost.

- ▶ Leave the heating system constantly switched ON if possible.
- ▶ Protect your heating system against frost by draining the pipework for central heating and DHW at the lowest possible point.
- ▶ Drain the heat exchanger.

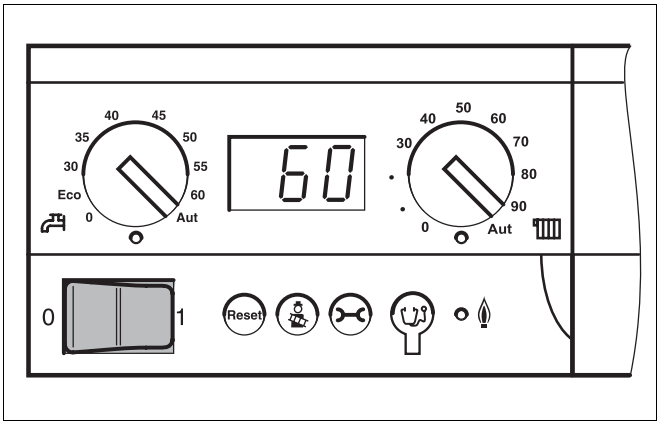

Fig. 6 Shutting down the heating system

3.3 In an emergency

In the event of an emergency, e.g. a fire, proceed as follows:

- ▶ Never risk your own life. Your own safety is paramount.
- ▶ Close the main fuel shut-off valve.
- ▶ Isolate the heating system from the mains power supply via the heating system emergency stop switch or the corresponding domestic fuse.

3.4 Checking the operating pressure and possibly topping-up the heating water and venting the system

3.4.1 When should you check the operating pressure?

Recently topped-up heating water loses much of its volume in the first few days because it releases gases. This creates air locks and the heating water starts to gurgle.

- ▶ After installing a new heating system, check the operating pressure daily for the first few days. If necessary top up with heating water and bleed the radiators.
- ▶ After a while the operating pressure will only need to be checked monthly. If necessary top up with heating water and bleed the radiators.

3.4.2 Checking the operating pressure

Your heating contractor has set the red needle of the pressure gauge to the required operating pressure (at least 1 bar).

- ▶ Check that the pressure gauge needle is within the green band.
- ▶ Top up with heating water if the pressure gauge needle is below the green range.

3.4.3 Topping up with heating water and venting the system

Let your local heating contractor show you where the boiler fill and drain cock for topping up the heating water is located on your heating system.

RISK TO HEALTH

from contamination of drinking water.

- ▶ Let your heating contractor show you how to top up your heating system with water.

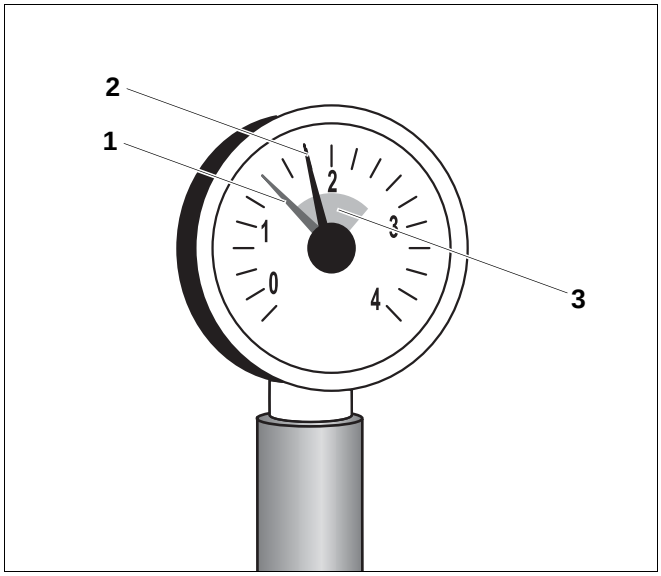

Fig. 7 Pressure gauge for sealed unvented systems

1 Red needle

2 Pressure gauge needle

3 Green band

SYSTEM DAMAGE

through temperature stresses.

Temperature stresses can cause cracks if you fill your heating system when it is hot. The boiler will then leak.

- ▶ Only fill the heating system when cold (the flow temperature must not exceed 40 °C).

- ▶ Slowly fill the heating system via the on-site fill valve. During filling, observe the pressure gauge.
- ▶ Once the desired operating pressure is reached, stop the procedure.

USER INFORMATION

Vent the boiler and heat exchanger separately.

- ▶ With the aid of a bleed key, bleed the heat exchanger via the bleed valve.
- ▶ Vent the heating system via the radiator bleed valves.
- ▶ Top up with water again if the operating pressure drops as a result of bleeding the system.

SYSTEM DAMAGE

through frequent topping up.

The heating system may be damaged, depending on water quality, by corrosion or scaling if you frequently need to top-up the heating water.

- ▶ Ask your heating contractor whether you can use your tap water untreated or whether you need to treat it before filling your system.
- ▶ Notify your heating contractor if you need to regularly add top-up water to your system.

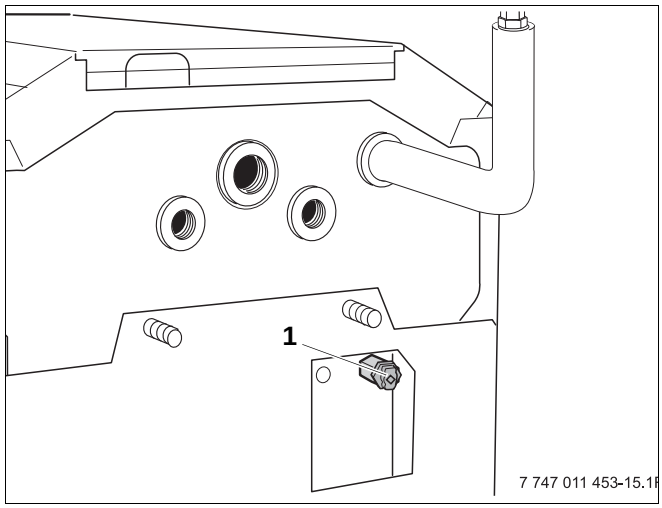

Fig. 8 Venting the heat exchanger

1 Bleed valve (5 mm quadrant) on the heat exchanger

3.5 Operating information

Correct fuel

This heating system requires fuel of the correct type and grade to ensure its correct operation.



SYSTEM DAMAGE

through incorrect fuel.

- Use only the fuel specified.

Follow the advice of your heating contractor if you want to convert your heating system to another type of fuel or use fuel with a different specification.

Installation location



BOILER DAMAGE

through contaminated combustion air.

- Never use chlorinated cleaning agents or halogenated hydrocarbons (such as those contained in spray cans, solvents or cleaning agents, paints and adhesives).
- Avoid very dusty atmospheres.



SYSTEM DAMAGE

through water.

- If there is a serious risk of flooding, disconnect the boiler from its power supply and shut off the fuel supply before water enters the boiler room (→ Chapter 3.2, page 7).
- If water entered your heating system, ask your heating contractor to check the system prior to returning it to use.
- Ask your heating contractor to replace any valves and control/regulating equipment which have come into contact with water.

Use the following fuel only:

Stamp/date/signature

3.6 Why is regular maintenance important?

Heating systems should be regularly serviced for the following reasons:

- to maintain a high level of efficiency and to operate the system economically (low fuel consumption),
- to achieve a high level of operational reliability
- to maintain the cleanest possible combustion



SYSTEM DAMAGE

through lack of, or unsatisfactory, cleaning and maintenance.

- ▶ Have your heating system inspected, cleaned and serviced once a year by a heating contractor.
- ▶ We recommend you enter into a contract covering an annual inspection, and maintenance on a demand-dependent basis.

4 Troubleshooting

4.1 Identifying and clearing faults

If there is a fault, the fault code will flash on the control unit display. The programming unit shows faults as plain text messages.

A fault is present if the display flashes and indicates something other than the current boiler water temperature or a message related to standard operation.

Example: "6A" = burner does not start

- Press and hold down the “Reset” button for about 5 seconds to clear the fault.

The display shows "rE" whilst the reset is being implemented. The reset is only possible if a fault message flashes.

If the display then reverts to a standard operating message, the fault has been cleared. Should the fault recur, repeat the reset two or three times.

SYSTEM DAMAGE

from frost.

The heating system can freeze up if it has been switched off through a fault shutdown.

- Immediately remedy the fault and restart the heating system.
- If this is not possible, protect your heating system against freezing by draining the central heating and DHW pipework at the lowest possible point.
- Drain the heat exchanger.

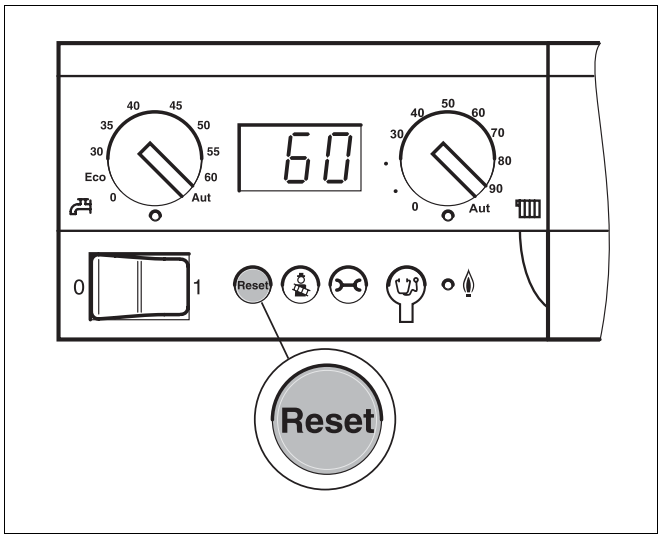

Fig. 9 Clearing a fault with the "Reset"

Middle East and Caucasian Area

Bosch Termoteknik Dış Ticaret A.Ş.
İstanbul Deri ve Endüstri Serbest Bölgesi
T-10 Parsel 34975 Tuzla
İstanbul / Turkey
Tel.: +90 216 581 03 00

Products manufactured by
Bosch Thermotechnik GmbH
Sophienstrasse 30-32
D-35576 Wetzlar

www.buderus.com

Buderus